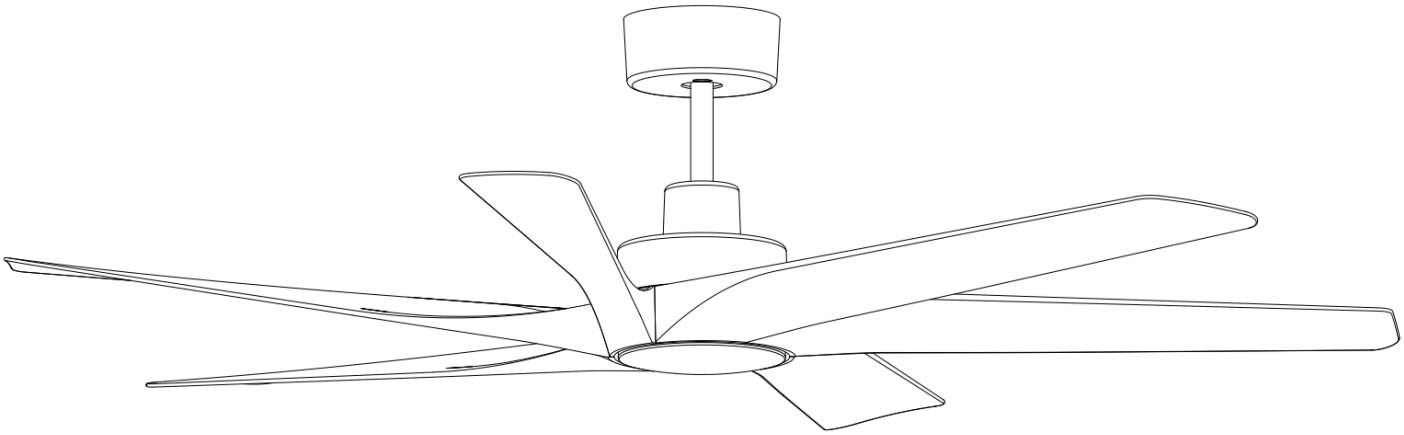

LUCCI AIR

MANTUS

DC CEILING FAN

- INSTALLATION
- OPERATION
- MAINTENANCE
- WARRANTY INFORMATION

CAUTION

READ INSTRUCTIONS CAREFULLY FOR SAFE INSTALLATION AND FAN OPERATION.

V1.0-AU (06/2026)

THANK YOU FOR PURCHASING

Thank you for purchasing the latest in energy saving ceiling fans. This fan runs on DC (direct current) power which gives it the benefit of being super energy efficient whilst still maintaining high volume air-movement and silent operation.

Energy saving - The DC motor is the latest technology in fan design. Its highly efficient motor saves up to 65% more energy than ceiling fans with traditional AC motors.

Silent operation – This DC fan motor is programmed with a stabilised current which efficiently reduces motor noise.

Low operating temperature – The DC power is managed effectively which brings down the motor operating temperature to less than 50℃. This results in a much cooler motor than a standard AC fan and increases the longevity of the motor.

8 speed remote control - Regular AC ceiling fans usually come with only 3 speeds, this DC fan comes complete with a 8 speed remote, which gives a greater choice of comfort levels.

SAFETY PRECAUTIONS

1. The appliance is not intended for use by persons (including children) with reduced physical, sensory or mental capabilities, or lack of experience and knowledge, unless they have been given supervision or instruction concerning the use of the appliance by a person responsible for their safety.
2. Children should be supervised to ensure that they do not play with the appliance.
3. An all-pole disconnection switch must be incorporated into the fixed wiring, in accordance with local wiring rules.

IN AUSTRALIA

WARNING:

FOR SAFE USE OF THIS FAN AN ALL-POLE DISCONNECTION MUST BE INCORPORATED INTO THE FIXED WIRING IN ACCORDANCE WITH THE WIRING RULES.

As outline in clause 7.12.2 of AS/NZS 60335-1 for meeting the minimum electrical safety of this standard.

Please note warranty will be void if installation is without a means for an all-pole disconnection incorporated in the fixed wiring in accordance with

COASTAL

This fan is suitable for indoor, alfresco and coastal areas where the fan is fully undercover with a minimum of 1 wall. This fan is not waterproof. When installed in an alfresco or coastal area, the ceiling fan must be positioned in a location protected from water, wind and dust. Exposure to these elements will void the warranty. Mounting the fan in a situation where it is subject to water or moisture is dangerous.

the wiring rules.

Example: If a fan is connected to a circuit that can be isolated via an all-pole safety switch at the switchboard, then this is considered to be an all-pole disconnection to the ceiling fan electrical circuit, meeting the requirements of clause 7.12.2 of AS/NZS 60335.1.

A single-pole switch on the active of the receiver input of remote control must also be included in the wiring, and located the same room as the ceiling fan.

4. Do not dispose of electrical appliances, remote or batteries as unsorted municipal waste, use separate collection facilities. Contact your local government for information regarding the collection systems available. If electrical appliances are disposed of in landfills or dumps, hazardous substances can leak into the ground water and get into the food chain, damaging your health and well-being.
5. The structure to which the fan is to be mounted must be capable of supporting a weight of 24 kg.
6. The fan should be mounted so that the blades are more than 2.1 m above the floor .
7. This fan is suitable for indoor, alfresco and coastal areas where the fan is fully undercover with a minimum of 1 wall. This fan is not waterproof. When installed in an alfresco or coastal area, the ceiling fan must be positioned in a location protected from water, wind and dust. Exposure to these elements will void the warranty. Mounting the fan in a situation where it is subject to water or moisture is dangerous and may increase the risk of damage, injury or electrical shock and will void the warranty.
8. Must be assembled and installed by a licensed electrician.
9. WARNING: If unusual wobbling or oscillating movement is observed, immediately stop using the ceiling fan and contact the manufacturer, its service agent or suitably qualified persons.
10. The replacement of parts of the safety suspension system device shall be performed by the manufacturer, its service agent or suitably qualified persons.
11. The fixing means for attachment to the ceiling such as hooks or other devices shall be fixed with a sufficient strength to withstand 4 times the weight of the ceiling fan; that the mounting of the suspension system shall be performed by the manufacturer, its service agent or suitably qualified persons.

COASTAL

This fan is suitable for indoor, alfresco and coastal areas where the fan is fully undercover with a minimum of 1 wall. This fan is not waterproof. When installed in an alfresco or coastal area, the ceiling fan must be positioned in a location protected from water, wind and dust. Exposure to these elements will void the warranty. Mounting the fan in a situation where it is subject to water or moisture is dangerous.

PARTS LIST

- Unpack your ceiling fan carefully. Remove all parts and hardware.
- Lay out all the components on a smooth surface and make sure there are no components missing before assembling. If parts are missing, return the complete product to the place of purchase for inspection or replacement.
- Check whether the ceiling fan has been damaged during transport. Do not operate/install any product that appears damaged in any way. Return the complete product to the place of purchase for inspection, repair or replacement.
- Examine all parts, you should have the following:

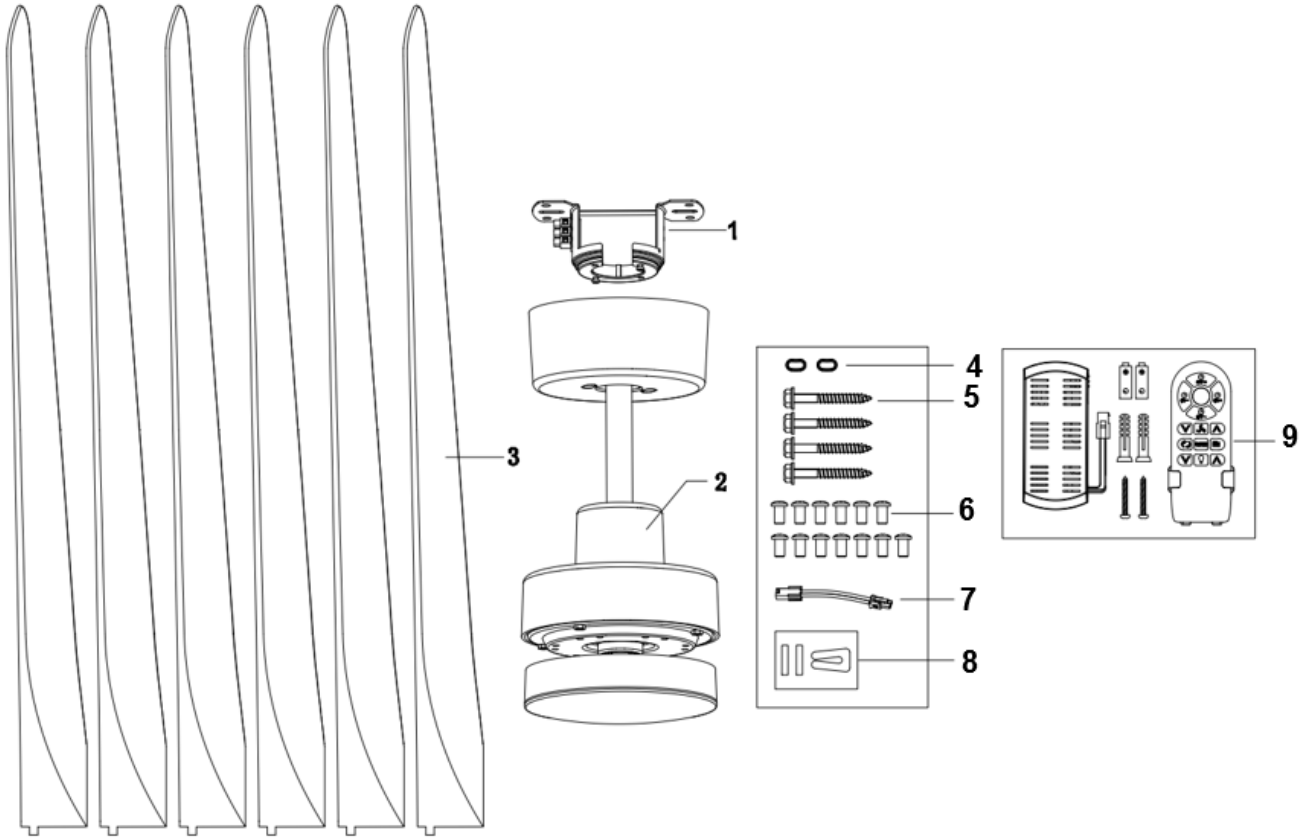

Fig. 1

1.	Mounting bracket x 1		6.	Blade screws x 12 (and 1 spare)
2.	Fan assembly with motor, canopy, down rod and bottom cover x 1		7.	Light kit extension cable x 1 (For use with extension down rod)
3.	Blades x 6 pcs		8.	Balance kit x 1 set
4.	Decorative chips for canopy holes x 2		9.	Remote receiver (P210218) and Remote controller, holder (P210151) x 1 set
5.	Mounting bracket screws x 4			

COASTAL

This fan is suitable for indoor, alfresco and coastal areas where the fan is fully undercover with a minimum of 1 wall. This fan is not waterproof. When installed in an alfresco or coastal area, the ceiling fan must be positioned in a location protected from water, wind and dust. Exposure to these elements will void the warranty. Mounting the fan in a situation where it is subject to water or moisture is dangerous.

INSTALLING THE FAN

TOOLS REQUIRED:

- Phillips / flat head screwdriver
- Pair of pliers
- Adjustable spanner
- Step ladder
- Wire cutter
- Wiring, supply cable as required by local provincial and national wiring codes and regulations

INSTALLING THE MOUNTING BRACKET

- The ceiling fan must be installed in a location so that the blades are spaced 300mm from the tip of the blade to the nearest objects or walls.
- Install the hanging bracket to the ceiling joist or structure that is capable of carrying a load of at least 24kg, with four long screws provided. Ensure at least 30mm of the screw is threaded into the support. (Fig. 2)

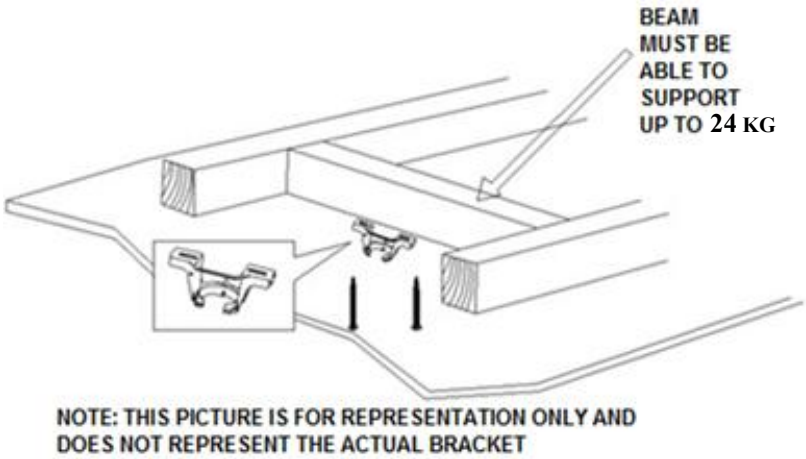

Fig. 2

NOTE: The bracket screws provided are for use with wooden structures only. For structures other than wood, the appropriate screw type MUST be used. Ensure the screws used are suitable for the mounting surface and the surrounding environment.

ANGLED CEILING INSTALLATION

This fan hanging system supports a maximum 13 degree angled ceiling installation. (Fig. 3)

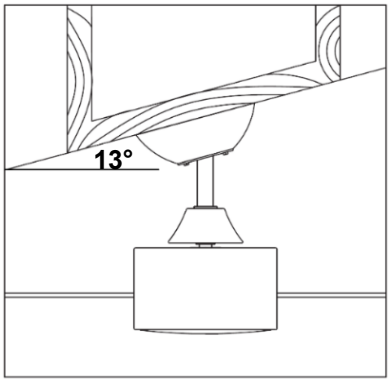

Fig. 3

COASTAL

This fan is suitable for indoor, alfresco and coastal areas where the fan is fully undercover with a minimum of 1 wall. This fan is not waterproof. When installed in an alfresco or coastal area, the ceiling fan must be positioned in a location protected from water, wind and dust. Exposure to these elements will void the warranty. Mounting the fan in a situation where it is subject to water or moisture is dangerous.

HANGING THE FAN

Lift the fan assembly onto the mounting bracket. Ensure the key slot (A) of the hanger ball is positioned on the key pin (B) of the mounting bracket (C) to prevent the fan from rotating when in operation. (Fig.4)

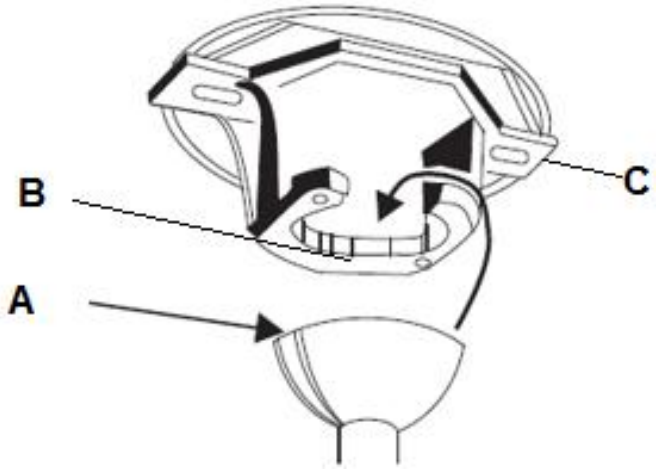

Fig. 4

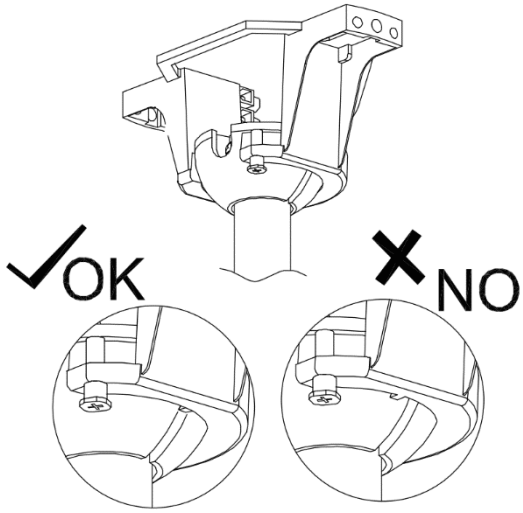

BLADE INSTALLATION

BLADE INSTALLATION

- Remove the bottom cover from the fan assembly. (Fig. 5)

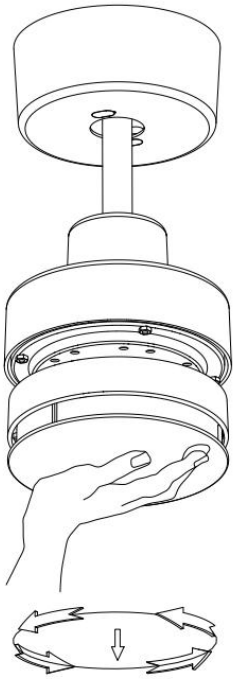

Fig. 5

- Align the 2 mounting holes on the blade to the 2 mounting screw holes on the motor and secure using 2 blade screws.
  Ensure the screws are tightened equally and evenly to reduce the chance of warping or unbalancing. Take care not to over-tighten the screws as this can damage the blades. (Fig.6)

Take note that the correct side of the blades with the marking "SIDE UP" faces the ceiling.

- Repeat this process for the remaining blades.

COASTAL

This fan is suitable for indoor, alfresco and coastal areas where the fan is fully undercover with a minimum of 1 wall. This fan is not waterproof. When installed in an alfresco or coastal area, the ceiling fan must be positioned in a location protected from water, wind and dust. Exposure to these elements will void the warranty. Mounting the fan in a situation where it is subject to water or moisture is dangerous.

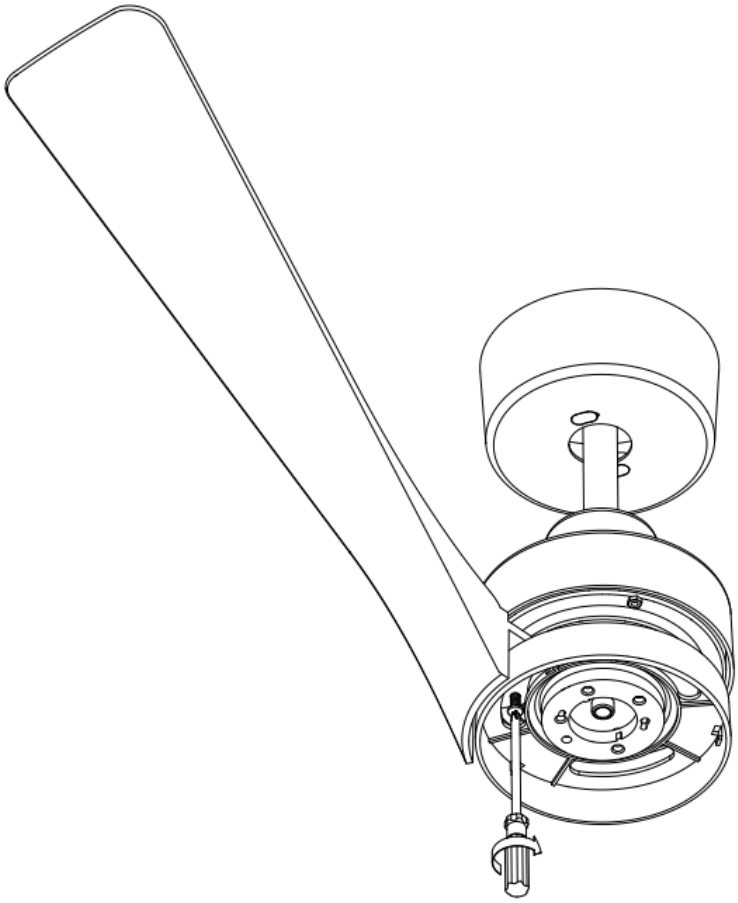

Fig. 6

- Install the bottom cover back onto the fan assembly. (Fig.7)

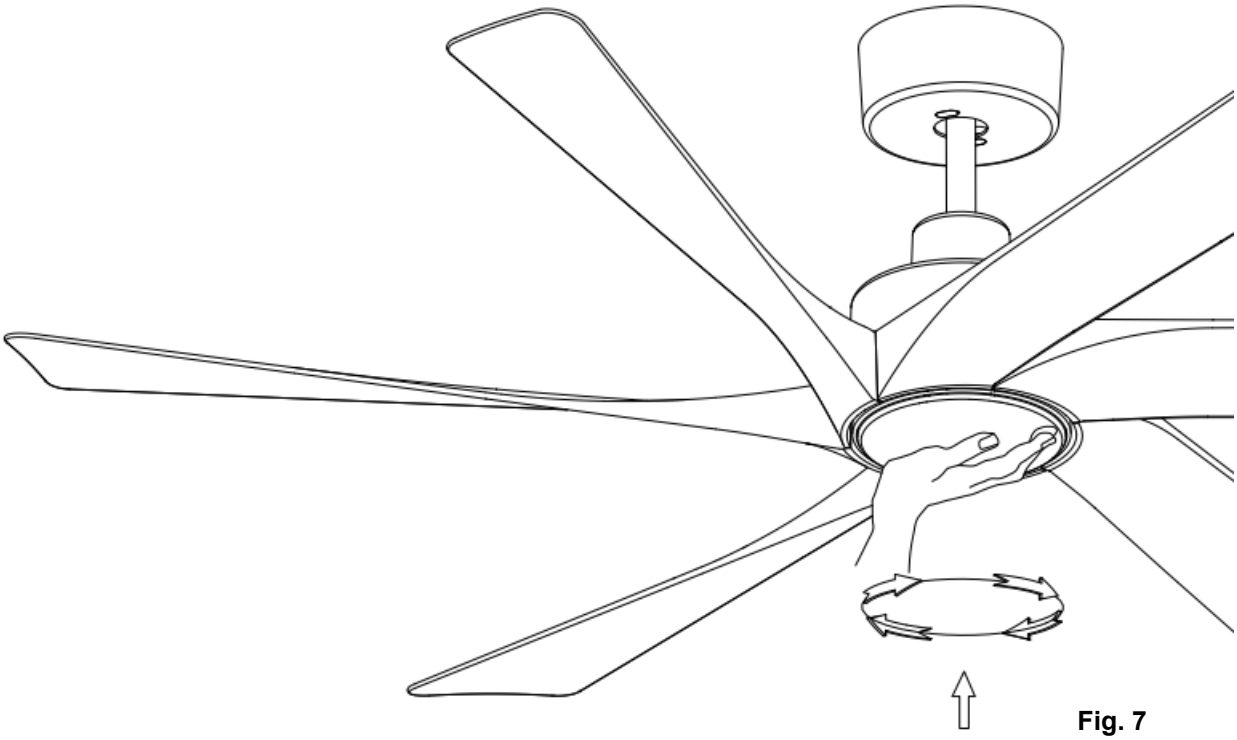

Fig. 7

COASTAL

This fan is suitable for indoor, alfresco and coastal areas where the fan is fully undercover with a minimum of 1 wall. This fan is not waterproof. When installed in an alfresco or coastal area, the ceiling fan must be positioned in a location protected from water, wind and dust. Exposure to these elements will void the warranty. Mounting the fan in a situation where it is subject to water or moisture is dangerous.

ELECTRICAL WIRING DIAGRAM

PREPARE AND COMPLETE THE ELECTRICAL WIRING --- WIRING DIAGRAM (FIG. 8)

NOTE: AN ADDITIONAL ALL POLE DISCONNECTION SWITCH MUST BE INCLUDED IN THE FIXED WIRING.
NOTE: IF THERE ARE TWO OR MORE DC CEILING FANS INSTALLED IN THE ONE LOCATION, AN SINGLE-POLE SWITCH IS REQUIRED FOR EACH CEILING FAN. THIS IS REQUIRED WHEN PROGRAMMING THE REMOTE AND RECEIVER TO PAIR TOGETHER.

NOTE: Ensure the motor earth wire is connected to the single earthing terminal block "（1）" in the diagram below (Fig. 8).

From mains supply to mounting bracket terminal block: （Fig. 8）

1. Connect the live supply wire to the "L" terminal of the terminal block on the mounting bracket.
2. Connect the neutral supply wire to "N" terminal of the terminal block on the mounting bracket.
3. Connect the earth wire to the earth terminal of the terminal block on the mounting bracket.

From mounting bracket to receiver and motor : （Fig. 8）

4. Connect the earth wire from the fan assembly to the single earthing terminal block "1" in the diagram below. (Fig. 8)
5. Insert the supply wiring quick connector (1) from the mounting bracket to the fan receiver.
6. Insert the input wiring quick connector (2) from the fan assembly to the fan receiver.
7. Connect the input wires quick connector (3) from the fan receiver to the input wires quick connector (3) from the fan assembly.

COASTAL

This fan is suitable for indoor, alfresco and coastal areas where the fan is fully undercover with a minimum of 1 wall. This fan is not waterproof. When installed in an alfresco or coastal area, the ceiling fan must be positioned in a location protected from water, wind and dust. Exposure to these elements will void the warranty. Mounting the fan in a situation where it is subject to water or moisture is dangerous.

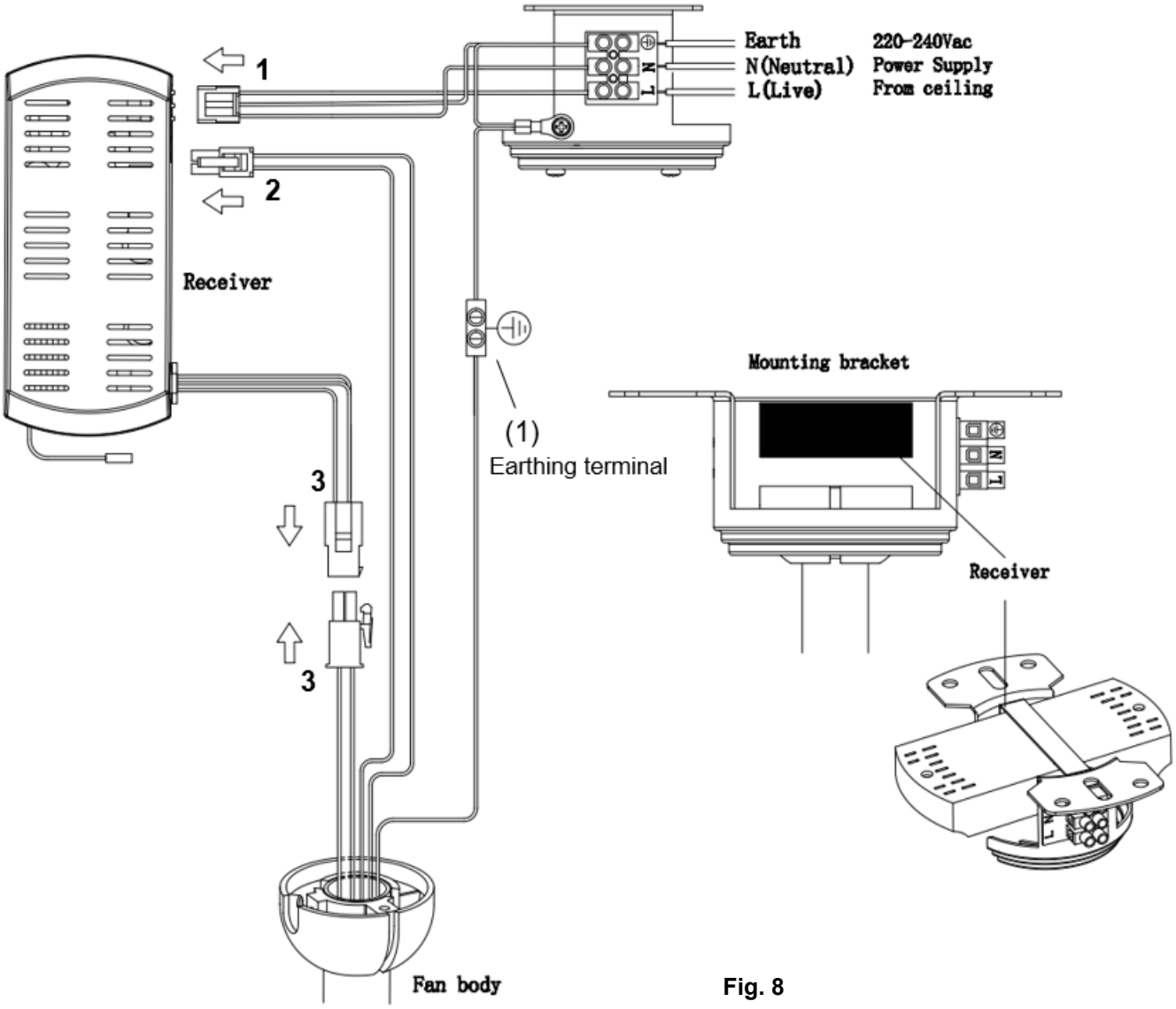

Fig. 8

Carefully insert the receiver above the hanger ball in the remainder spacing in the mounting bracket. Take care not to damage or loosen any of the wiring. (Fig.8)

COASTAL

This fan is suitable for indoor, alfresco and coastal areas where the fan is fully undercover with a minimum of 1 wall. This fan is not waterproof. When installed in an alfresco or coastal area, the ceiling fan must be positioned in a location protected from water, wind and dust. Exposure to these elements will void the warranty. Mounting the fan in a situation where it is subject to water or moisture is dangerous.

INSTALLATION OF LAMP

- If a lamp (not included, sold separately) is required, remove the bottom cover from the fan assembly by turning counterclockwise. (Fig.9)

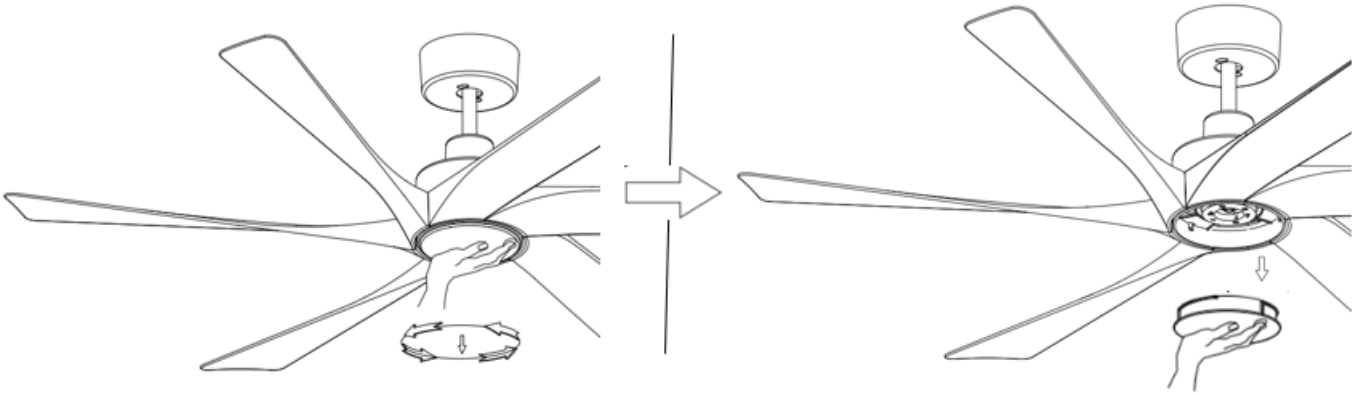

Fig. 9

- Install the Gx53 lamp on the fan assembly, then secure it by turning clockwise. (Fig.10)
  (NOTE: Gx53 LED lamp is an optional accessory and is not included with this appliance)

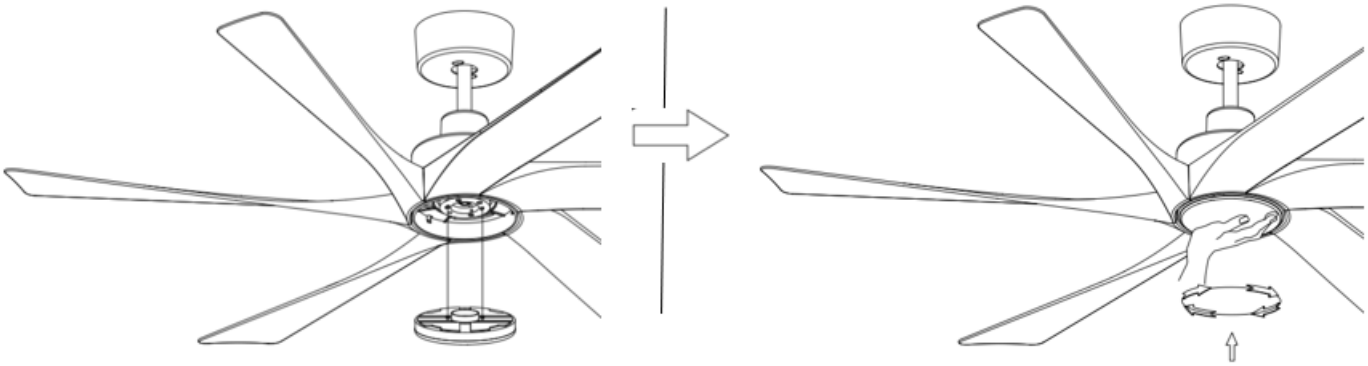

Fig. 10

COASTAL

This fan is suitable for indoor, alfresco and coastal areas where the fan is fully undercover with a minimum of 1 wall. This fan is not waterproof. When installed in an alfresco or coastal area, the ceiling fan must be positioned in a location protected from water, wind and dust. Exposure to these elements will void the warranty. Mounting the fan in a situation where it is subject to water or moisture is dangerous.

FINISHING THE INSTALLATION

After completing the electrical connection at the mounting bracket terminal block, connect the ceiling fan wiring via the quick connector plug.

NOTE: Ensure the earth wiring is secure and correct by performing an earth continuity test from the fan's accessible metal body back to the earth terminal at the terminal block on the mounting bracket.

INSTALLATION OF THE CANOPY (Fig. 11)

1. Loosen the 2 screws at the bottom of the mounting bracket.
2. Slide the canopy up to the mounting bracket and align the key holes on the canopy with the screws on the mounting bracket. Turn the canopy until it locks into place with the narrow section of the key holes, and secure it by tightening the two screws. Avoid damaging the electrical wiring prepared previously.
3. Insert the decorative chips into the holes of the canopy.

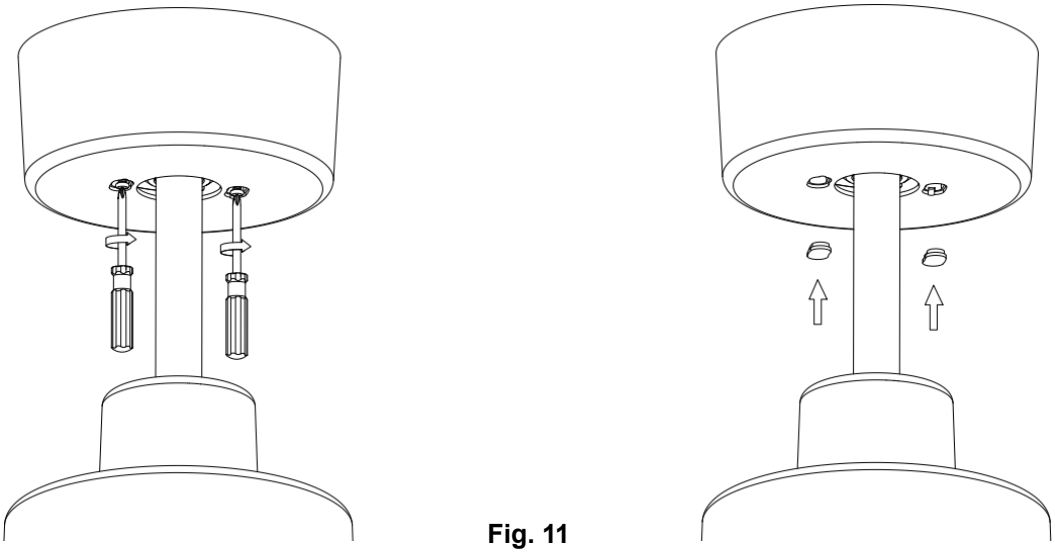

Fig. 11

INSTALLATION OF THE REMOTE CONTROL HOLDER (Fig. 12)

1. Locate a suitable wall to fix the remote control holder with the 2 screws & 2 anchors. (Fig.12a).
2. Slide the remote into the holder to rest the remote. (Fig. 12b)

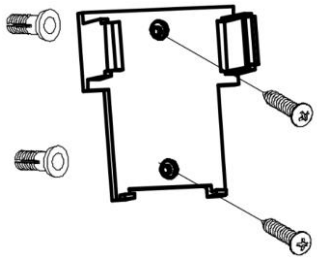

Fig. 12a

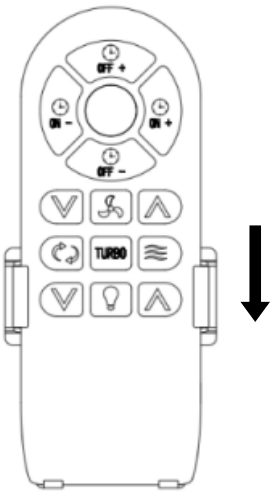

Fig. 12b

COASTAL

This fan is suitable for indoor, alfresco and coastal areas where the fan is fully undercover with a minimum of 1 wall. This fan is not waterproof. When installed in an alfresco or coastal area, the ceiling fan must be positioned in a location protected from water, wind and dust. Exposure to these elements will void the warranty. Mounting the fan in a situation where it is subject to water or moisture is dangerous.

USING YOUR CEILING FAN

REMOTE CONTROL

1. Open the battery compartment cover by removing the securing screw and insert 2 x AAA batteries. Note the correct battery polarity (+/-) when inserting the battery, and then replace the cover and secure it with the screw.
2. Follow the guide below to operate the fan and learn the functions.

(1) Timer control buttons
(2) LED panel
(3) Fan speed decrease button (7 => 1 speed)
(4) Fan speed increase button (1 => 7 speed)
(5) Fan On/Off button
(6) Forward/Reverse button
(7) Natural wind
Press this button to set the fan running at changing speed automatically. If the fan is working at speed 1, 2, 3, 4,then press this button,and the fan speed will cycle automatically among the speeds of 1,2,3,4. If the fan is working at speed 5,6,7,"TURBO"(8), then press this button,and the fan speed will cycle automatically among the speeds of 5,6,7,"TURBO"(8).

(8) Fan TURBO button
Press this button to rotate at a higher rotation speed than "7" speed. It's "8" speed.
(9) Light brightness increase button
(short press this button to increase the light brightness)
(10) Light brightness decrease button
(short press this button to decrease the light brightness)
(11) Light On/Off button

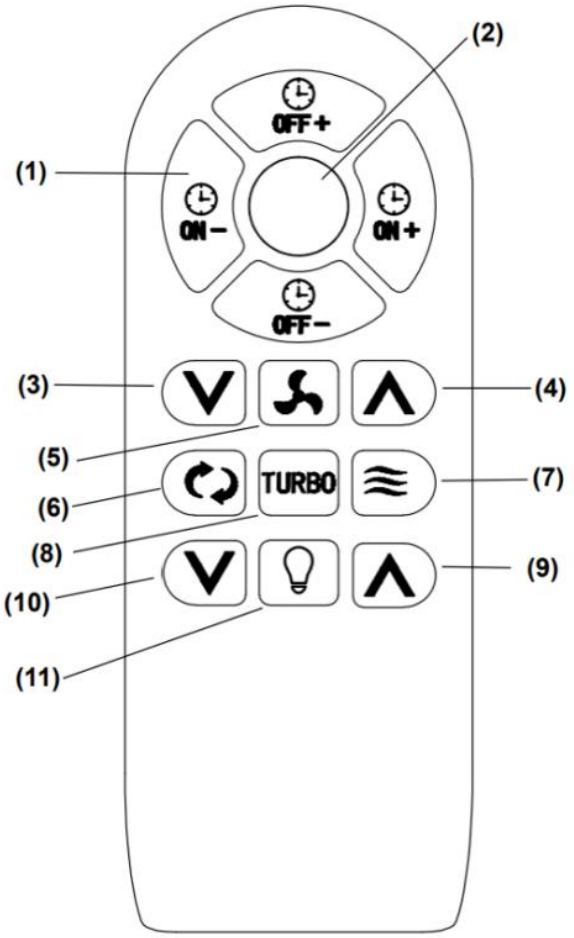

AAA **Note:** 2x AAA batteries are required to power remote (included)

Operating the timer

ON + Press the button to activate the fan timer function and increase or decrease the time setting between 1 and 12 hours, the fan will turn ON after the set time. To cancel the timer function, press the fan OFF button.

ON − **Note: The** Fan timer ON function will only activate when the fan is turned off by remote control.

OFF + Press the button to activate the fan timer function and increase or decrease the time setting between 1 and 12 hours, the fan will turn OFF after the set time. To cancel the timer function, press the fan OFF button.

OFF − **Note: The** Fan timer OFF function will only activate when the fan is running.

The remote has a memory function. If the fan is turned off from the isolating switch for over 7 seconds, the next time to turn on the fan will be on the last setting

COASTAL

This fan is suitable for indoor, alfresco and coastal areas where the fan is fully undercover with a minimum of 1 wall. This fan is not waterproof. When installed in an alfresco or coastal area, the ceiling fan must be positioned in a location protected from water, wind and dust. Exposure to these elements will void the warranty. Mounting the fan in a situation where it is subject to water or moisture is dangerous.

PAIRING THE FAN RECEIVER & REMOTE

NOTE: The pairing of the remote and receiver has been done at the factory.
When the ceiling fan is installed, pairing the fan receiver and remote is NOT required.

REPAIRING THE FAN RECEIVER & REMOTE PAIRING

Note: The remote and receiver have already been paired during manufacturing. The following steps are only necessary if the remote and fan become unpaired or if you need to pair multiple fans.
When operating this pairing function, please stand within 3 meters of the fan.

PAIRING REMOTE & RECEIVER – WHEN 1 DC CEILING FAN IS INSTALLED IN ONE LOCATION

NOTE: Ensure that you have installed a single pole disconnection switch in the fixed wiring for the fan.
NOTE: Ensure power to the receiver is ON prior to pairing the remote with the receiver.

- Turn OFF the mains supply to the fan by the on/off wall switch.
- Install the battery into the remote. Please make sure the polarity of the battery is correct.
- Turn ON the power to the receiver.
- Press and hold the " " fan On/Off button on the remote for 5 seconds within 30 seconds of switching the power ON to the receiver of the ceiling fan. There will be a notification 'beep' sound from the receiver to indicate that the pairing process is successful.
- Turn ON the fan and change the speed of the ceiling fan via the remote to check the operation and successful pairing.
- If pairing has been unsuccessful, repeat this set of steps again.

PAIRING REMOTE & RECEIVER – WHEN 2 OR MORE DC CEILING FANS ARE INSTALLED IN ONE LOCATION

NOTE: Ensure that you have installed a single pole disconnection switch in the fixed wiring for each fan.

- If you want to control 2 or more ceiling fans with one remote, do as explained in the normal pairing process, but make sure all the ceiling fans' wall switches are turned ON.
- If you want to control them with individual remotes, do as explained in the normal pairing process, but make sure the other ceiling fans' wall switches are turned OFF. After the first fan is paired, turn the wall switch OFF and continue the normal pairing process with the next fan.

COASTAL

This fan is suitable for indoor, alfresco and coastal areas where the fan is fully undercover with a minimum of 1 wall. This fan is not waterproof. When installed in an alfresco or coastal area, the ceiling fan must be positioned in a location protected from water, wind and dust. Exposure to these elements will void the warranty. Mounting the fan in a situation where it is subject to water or moisture is dangerous.

REVERSE FUNCTION

Your ceiling fan can operate either in fan (summer) mode or reverse fan (winter) mode. Use the " " forward/reverse button on the remote to switch between summer and winter mode.

Summer mode: The fan will rotate in an anticlockwise direction. The airflow will be directed downwards for cooling in summer.

Winter mode: The fan will rotate in a clockwise direction. The airflow will be directed upwards, for energy conservation, ensuring an even temperature throughout your room during winter.

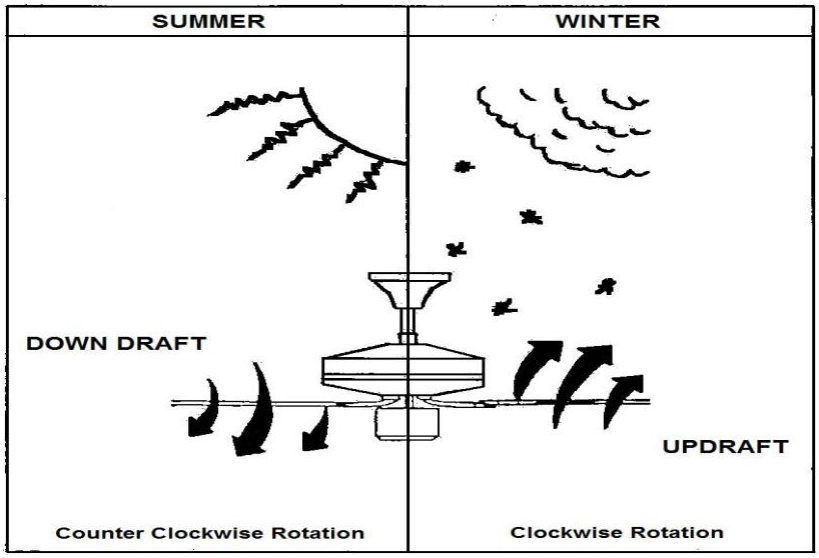

REPAIRING THE REMOTE & RECEIVER PAIRING – WHEN 1 CEILING FAN IS INSTALLED

- If the remote and receiver lose control after installation or during use, the pairing of the remote and the receiver must be repeated.
- Below are the operating symptoms and the steps to repeat the pairing of the remote and receiver.

Symptoms:

- Loss of control - The Fan is only running at high speed after installation
- Loss of control - No reverse function after installation
- Loss of control - The Remote cannot communicate with the receiver

Solution:

- Switch off the main power of the ceiling fan.
- Switch on the main power of the ceiling fan. Press and hold the " " fan On/Off button on the remote for 5 seconds within 30 seconds after switching on. There will be a notification 'beep' sound from the receiver to indicate that the pairing process is successful.
- Turn on and select the different speeds of the ceiling fan to check the operation of the fan.

COASTAL

This fan is suitable for indoor, alfresco and coastal areas where the fan is fully undercover with a minimum of 1 wall. This fan is not waterproof. When installed in an alfresco or coastal area, the ceiling fan must be positioned in a location protected from water, wind and dust. Exposure to these elements will void the warranty. Mounting the fan in a situation where it is subject to water or moisture is dangerous.

AFTER INSTALLATION

NOTE: Ceiling fans tend to move during operation due to the fact that they are mounted on a rubber grommet. If the fan was mounted rigidly to the ceiling, it would cause excessive vibration. Movement of a few centimetres is quite acceptable and DOES NOT suggest any problem.

TO REDUCE THE FAN WOBBLE: Please check that all screws which fix the mounting bracket and down rod are secure.

BALANCING KIT: A balancing kit is provided to balance the ceiling fan on initial installation. Please refer to the instruction on how to use the balancing kit. The balancing kit can be used to assist re-balancing should the ceiling fan become un-balanced again. Store your balancing kit away after installation for future use if required.

NOISE:

When it is quiet (especially at night) you may hear occasional small noises. Slight power fluctuations and frequency signals superimposed in the electricity for off-peak hot water control may cause a change in fan motor noise. This is normal. Please allow a 24-hour “settling-in” period, most noises associated with a new fan disappear during this time.

The manufacturer’s warranty covers actual faults that may develop and NOT minor complaints such as hearing the motor run – All electric motors are audible to some extent.

Beep: When the receiver detects a problem with the fan, it will emit a “beeping” sound. If the receiver beeps 6 times, check all the interconnector wiring and ensure it makes good contact and the colours match.

CARE & CLEANING

NOTE: Always turn OFF the power at the mains switch before performing any maintenance or attempting to clean your fan.

- Every 6 months periodic cleaning of your ceiling fan is the only maintenance required. Use a soft brush or lint free cloth to avoid scratching the paint finish. Please turn off electricity power when you do so.
- Do not soak or immerse your ceiling fan in the water or other liquids. It could damage the motor or the blades and create the possibility of an electrical shock.
- Ensure that the fan does not come in contact with any organic solvents or cleaners.
- To clean the fan blade, wipe with only a damp clean cloth with NO organic solvents or cleaners.
- The motor has a permanently lubricated ball bearing so there is no need to oil.

COASTAL

This fan is suitable for indoor, alfresco and coastal areas where the fan is fully undercover with a minimum of 1 wall. This fan is not waterproof. When installed in an alfresco or coastal area, the ceiling fan must be positioned in a location protected from water, wind and dust. Exposure to these elements will void the warranty. Mounting the fan in a situation where it is subject to water or moisture is dangerous.

SAFETY PRECAUTIONS FOR BATTERY

- **WARNING –** Keep new and used batteries away from children.
- **CAUTION –** Do not ingest battery—Chemical burn hazard.
- Always use 2 x AAA battery type with this ceiling fan remote controller.
- Ensure the batteries are inserted with the correct polarity.
- To prevent false operation during battery insertion or replacement, this ceiling fan must be disconnected from the supply mains.
- non-rechargeable batteries are not to be recharged;
- different types of batteries or new and used batteries are not to be mixed;
- Remove batteries from the product when not in use for long periods of time.
- Batteries must be removed from the remote transmitter before it is discarded.
- Dispose of exhausted batteries immediately and safely (so they cannot be retrieved by children). Batteries can still be dangerous. Contact your local council to safely dispose of the battery.
- Regularly check the product and make sure the battery box lid is correctly secured. If the battery compartment does not close securely, stop using the product and keep it away from children.
- If you think batteries might have been swallowed or placed inside any part of the body, seek immediate medical attention. If you suspect your child has swallowed or inserted a button battery, immediately call the 24-hour Poisons Information Centre on **13 11 26** for fast, expert advice.
- Battery Leaks: Battery contains chemicals and should be treated as any chemical would. Take precautions when handling leaked battery chemicals. Battery chemicals should not be placed near the eyes or ingested. Contact Poisons Information Centre on **13 11 26** for fast, expert advice.

TECHNICAL INFORMATION

Fan	56” MANTUS DC fan	
Fan Models	SKU# 213273	SKU# 213274
Rated Voltage	220-240V~ 50Hz	
Rated Wattage (Motor)	40W	
Rated wattage (Lamp)	SKU# 128161: GX53,12W, 1350lm, Dimmable, CCT 3000K 4000K 5000K (Not Included, sold separately)	
Battery for remote	2 x AAA (Included)	
Weight	5.8kg	
Canopy Dimensions	H:54mm Dia:155mm	

COASTAL

This fan is suitable for indoor, alfresco and coastal areas where the fan is fully undercover with a minimum of 1 wall. This fan is not waterproof. When installed in an alfresco or coastal area, the ceiling fan must be positioned in a location protected from water, wind and dust. Exposure to these elements will void the warranty. Mounting the fan in a situation where it is subject to water or moisture is dangerous.

LUCCI CEILING FAN WARRANTY DETAIL

LUCCI FAN WARRANTY CONTACT INFORMATION:

Online Warranty Form: https://www.beaconlighting.com.au/warranty-claims
Email: warranty@beaconlighting.com.au
Lucci Fan Warranty Hotline: (Free Call) 1800 602 243

THIS WARRANTY IS VALID IN AUSTRALIA ONLY

In the event of service being required, please call the Lucci Fan Warranty Hotline on 1800 602 243 between 9am & 5pm (EST) Monday to Friday. Please make sure you have all the ceiling fan details filled out at the end of the manual before making the call.

Every Lucci ceiling fan is thoroughly inspected and tested before being released for sale. In addition to any warranty rights or conditions under statutory regulations, Lucci warrants all its ceiling fans against defective workmanship and faulty materials for two (2) years from the date of purchase. Following this, an additional seven (7) years motor replacement warranty applies. Lucci undertakes, at its option, to repair or replace, free of charge, each product or part thereof on condition that;

1. The fan or relevant part has not been subjected to misuse, neglect, or been involved in an accident.
2. The repairs are not required as a result of normal wear and tear.
3. The product was installed by a licensed electrical contractor.
4. A copy of the original receipt of purchase is presented.
5. 12 month warranty applies when used in any non-domestic applications.
6. This warranty does not cover stains, scratch and scuff marks, or dents if the product is purchased through a factory outlet or to refurbished items.

Our goods come with guarantees that cannot be excluded under the Australian Consumer Law. You are entitled to a replacement or refund for a major failure and compensation for any other reasonably foreseeable loss or damage. You are also entitled to have the goods repaired or replaced if the goods fail to be of acceptable quality and the failure does not amount to a major failure.

Lucci Design cannot be held responsible for any repair other than those carried out by it or one of its Authorised Service Agents. Please keep this warranty information in a safe place. This information must be produced in the event of service being required.

Distributed by:
Beacon Lighting
140 Fulton Drive
Derrimut, Victoria, 3026, Australia
Ph +613 9368 1000
Email: warranty@beaconlighting.com.au

COASTAL

This fan is suitable for indoor, alfresco and coastal areas where the fan is fully undercover with a minimum of 1 wall. This fan is not waterproof. When installed in an alfresco or coastal area, the ceiling fan must be positioned in a location protected from water, wind and dust. Exposure to these elements will void the warranty. Mounting the fan in a situation where it is subject to water or moisture is dangerous.

CEILING FAN WARRANTY INFORMATION

LUCCI FAN WARRANTY CONTACT INFORMATION:

Online Warranty Form: https://www.beaconlighting.com.au/warranty-claims

Email: warranty@beaconlighting.com.au

Lucci Fan Warranty Hotline: (Free Call) 1800 602 243

Complete and retain this form for your personal records and warranty purposes.

NAME……..…

ADDRESS……..……

……POSTCODE……

MODEL NUMBER……...…

(PO# + DATECODE Sticker here)

PO NUMBER or DATECODE …….

DATE OF PURCHASE……..…

INSTALLING LICENSED ELECTRICIAN……...…

……..……

LICENCE No……..……

ATTACH PROOF OF PURCHASE HERE

THIS COMPLETED DETAIL PAGE SHOULD BE PRODUCED AND SENT TO THE WHOLESALER OR THEIR AUTHORISED AGENTS BEFORE OBTAINING WARRANTY SERVICE

COASTAL

This fan is suitable for indoor, alfresco and coastal areas where the fan is fully undercover with a minimum of 1 wall. This fan is not waterproof. When installed in an alfresco or coastal area, the ceiling fan must be positioned in a location protected from water, wind and dust. Exposure to these elements will void the warranty. Mounting the fan in a situation where it is subject to water or moisture is dangerous.